MAKEN
Make It Happen

32 INCH DISPLAY STAND

SF-2203

- 32 inch display screen
- Large internal space to hide wires and store tools
- Option:Screen

FEATURE

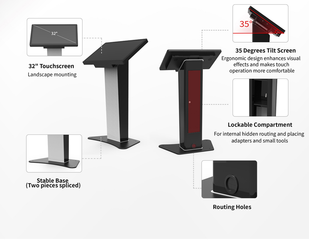

All Metal Construction, Stable And Durable

Simple and sleek designing, with 35° angle touch screen display and appropriate height of the stand, SF-2203 fully consider the ergonomics, and provide users with the most comfortable viewing and operating experience. Stand and base are combined installation. Constructed with industrial heavy-duty steel, it ensures the stability and durability for whole unit.

Multiple Security Design

The touch screen display is fixed on the mounting stand by an index pin. After opened the rear door, the touch screen display can be removed by pulling down the index pin. Design of the index pin prevents the screen from being removed or stolen.

Large Internal Space For Wiring And Storage

Inside the stand body, it is a lockable hidden compartment with horizontal partitions, wiring holes, etc. In addition to being used for internal wiring and cable protecting, it can also be used as a small storage space for storing power strips, adapters, small tools, to facilitate daily maintenance.

CABLE ROUNTING

APPLICATION

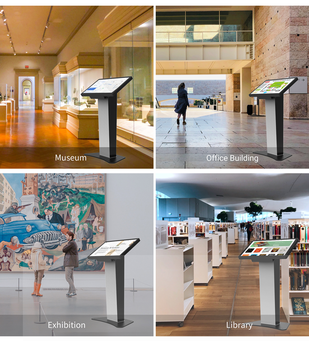

SPECIFICATIONS

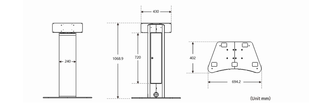

Model No.	SF-2203
Compatibility	32"
Material	SPCC
Surface	Powder coating
Overall Size	694.2×402×1068.9 (mm)
Net Weight	34.61kg
Package	1145×340×420 (mm)
Gross Weight	39.7kg

INSTALLATION

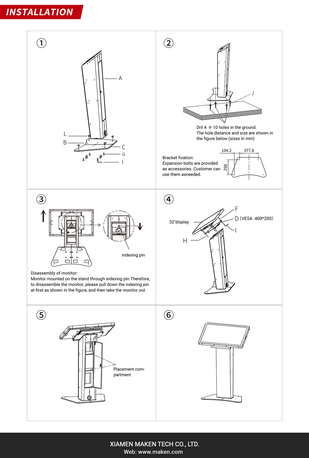

XIAMEN MAKEN TECH CO., LTD.
Web: www.maken.com